Cambridge IGCSE

Cambridge International Examinations
Cambridge International General Certificate of Secondary Education

PHYSICS **0625/23**

Paper 2 Multiple Choice (Extended) **May/June 2017**

45 minutes

Additional Materials: Multiple Choice Answer Sheet
Soft clean eraser
Soft pencil (type B or HB recommended)

* 3 1 8 2 4 2 7 8 3 8 *

READ THESE INSTRUCTIONS FIRST

Write in soft pencil.
Do not use staples, paper clips, glue or correction fluid.
Write your name, Centre number and candidate number on the Answer Sheet in the spaces provided unless this has been done for you.
DO **NOT** WRITE IN ANY BARCODES.

There are **forty** questions on this paper. Answer **all** questions. For each question there are four possible answers **A**, **B**, **C** and **D**.
Choose the **one** you consider correct and record your choice in **soft pencil** on the separate Answer Sheet.

Read the instructions on the Answer Sheet very carefully.

Each correct answer will score one mark. A mark will not be deducted for a wrong answer.
Any rough working should be done in this booklet.
Electronic calculators may be used.
Take the weight of 1.0 kg to be 10 N (acceleration of free fall = 10 m / s^2).

root19

The syllabus is approved for use in England, Wales and Northern Ireland as a Cambridge International Level 1/Level 2 Certificate.

This document consists of **18** printed pages and **2** blank pages.

IB17 06_0625_23_VI_YEL/FP
© UCLES 2017

CAMBRIDGE International Examinations

www.root19.com +91 - 9969 353 391

1 What is the most accurate and precise method to measure the thickness of a coin?

A Use a micrometer screw gauge.

B Use a ruler and look at the scale perpendicularly.

C Use a top pan balance.

D Use the displacement method with water in a measuring cylinder.

2 A pendulum is swinging. Five students each measure the time it takes to swing through ten complete swings.

Three students measure the time as 17.2 s. Another student measures it as 16.9 s, and the fifth student measures it as 17.0 s.

What is the average period of the pendulum?

A 1.69 s **B** 1.70 s **C** 1.71 s **D** 1.72 s

3 Which distance-time graph represents a body whose speed is decreasing?

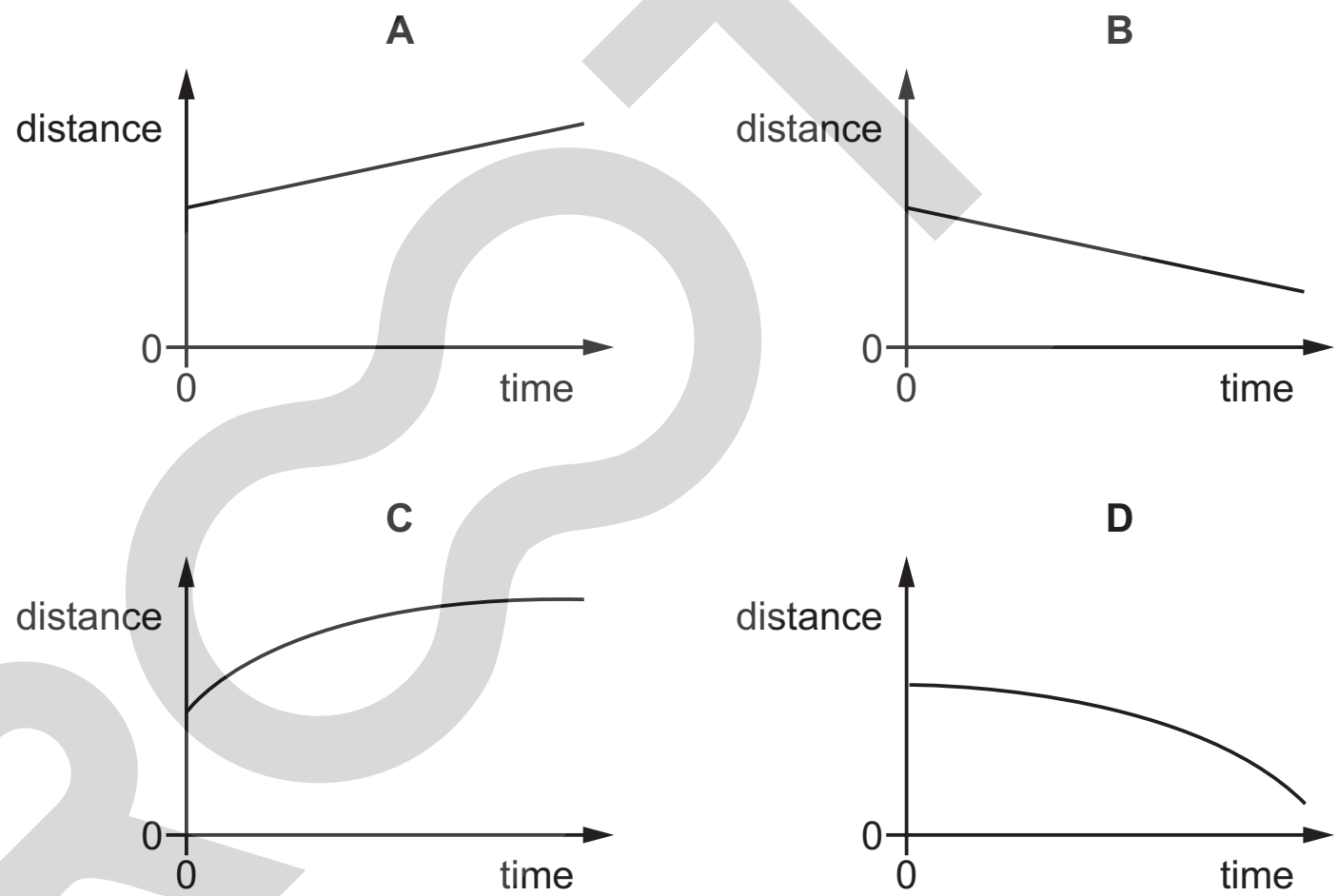

www.root19.com +91 - 9969 353 391

4 What are the units for mass, pressure and velocity?

	mass	pressure	velocity
A	kg	N s	Pa
B	kg	Pa	m / s
C	N s	Pa	m / s
D	Pa	N s	m / s

5 A steel ball bearing has a mass of 24 g and a density of 8.0 g / cm^3. It is lowered into a measuring cylinder containing 12 cm^3 of water.

What is the new water level in the cylinder?

A 3.0 cm^3 **B** 4.0 cm^3 **C** 15 cm^3 **D** 16 cm^3

6 The diagram shows an object being acted upon by two forces.

What is the size of the resultant force on the object?

A 2.0 N **B** 3.0 N **C** 9.0 N **D** 18 N

www.root19.com +91 - 9969 353 391

7 The diagram shows a man holding a sack and barrow stationary. He applies a vertical force to the handle.

The centre of mass and the weight of the sack and barrow are shown. The wheel acts as a pivot.

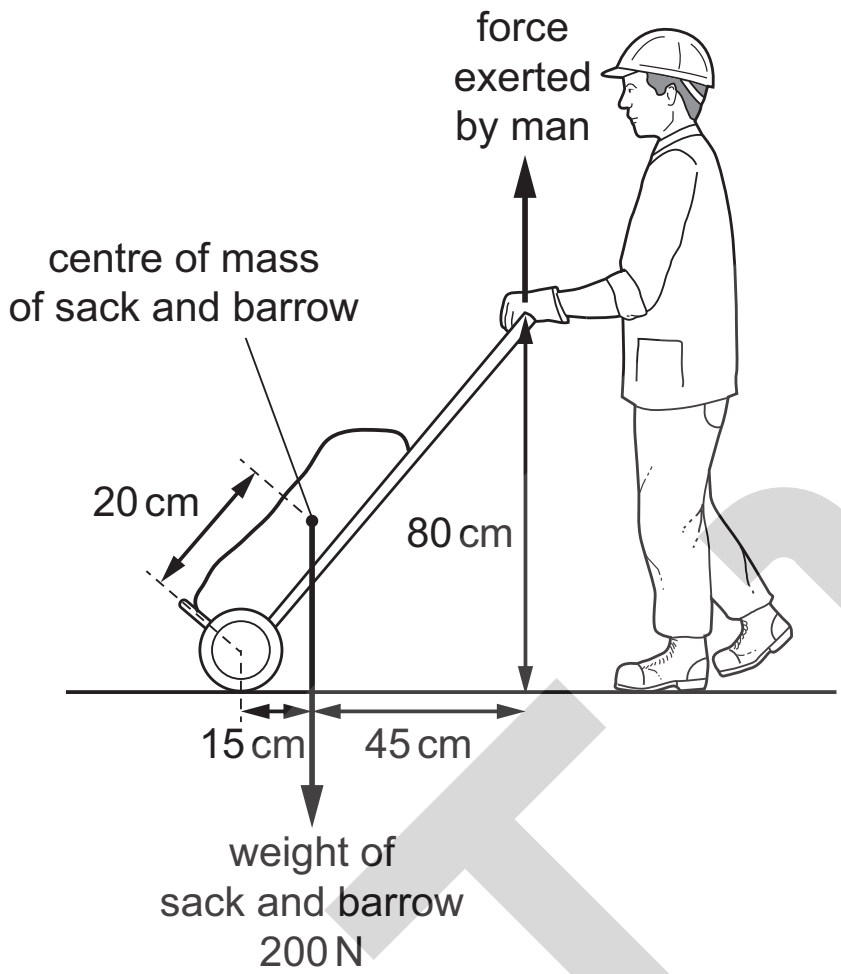

What is the magnitude of the vertical force exerted by the man?

A 38 N **B** 50 N **C** 67 N **D** 200 N

www.root19.com +91 - 9969 353 391

8 The diagram shows the only two forces F_1 and F_2 acting on an object. The magnitude of each force is represented by the length of each arrow.

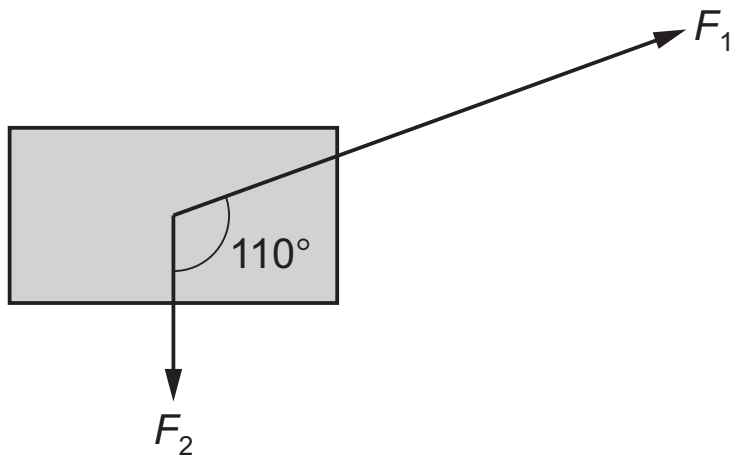

The resultant force acting on the object is R.

Which vector diagram shows how forces F_1 and F_2 add to produce R?

A

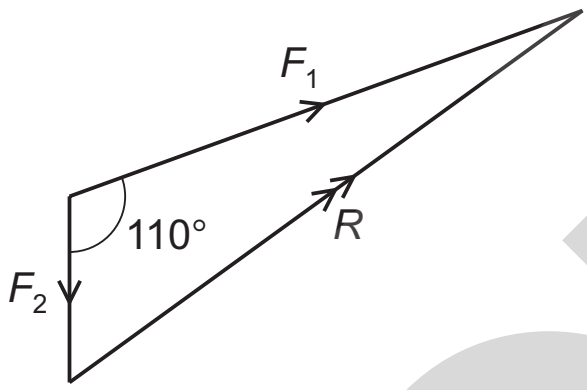

B

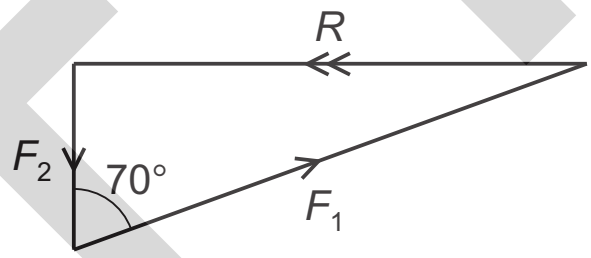

C

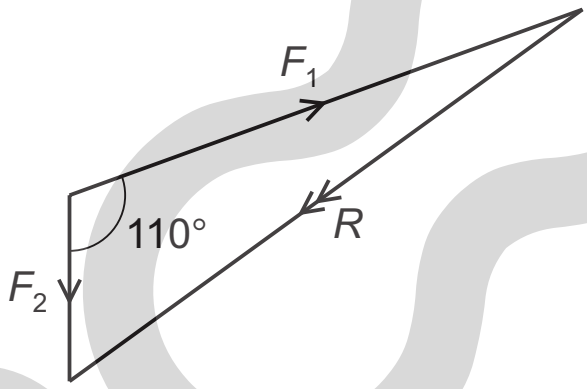

D

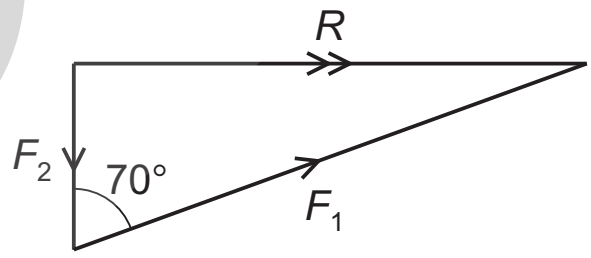

© UCLES 2017

www.root19.com
+91 - 9969 353 391

9 The diagrams show four bodies moving in the directions shown. The only forces acting on the bodies are shown in each diagram.

Which body gains the most kinetic energy when moving a distance of 1.0 m?

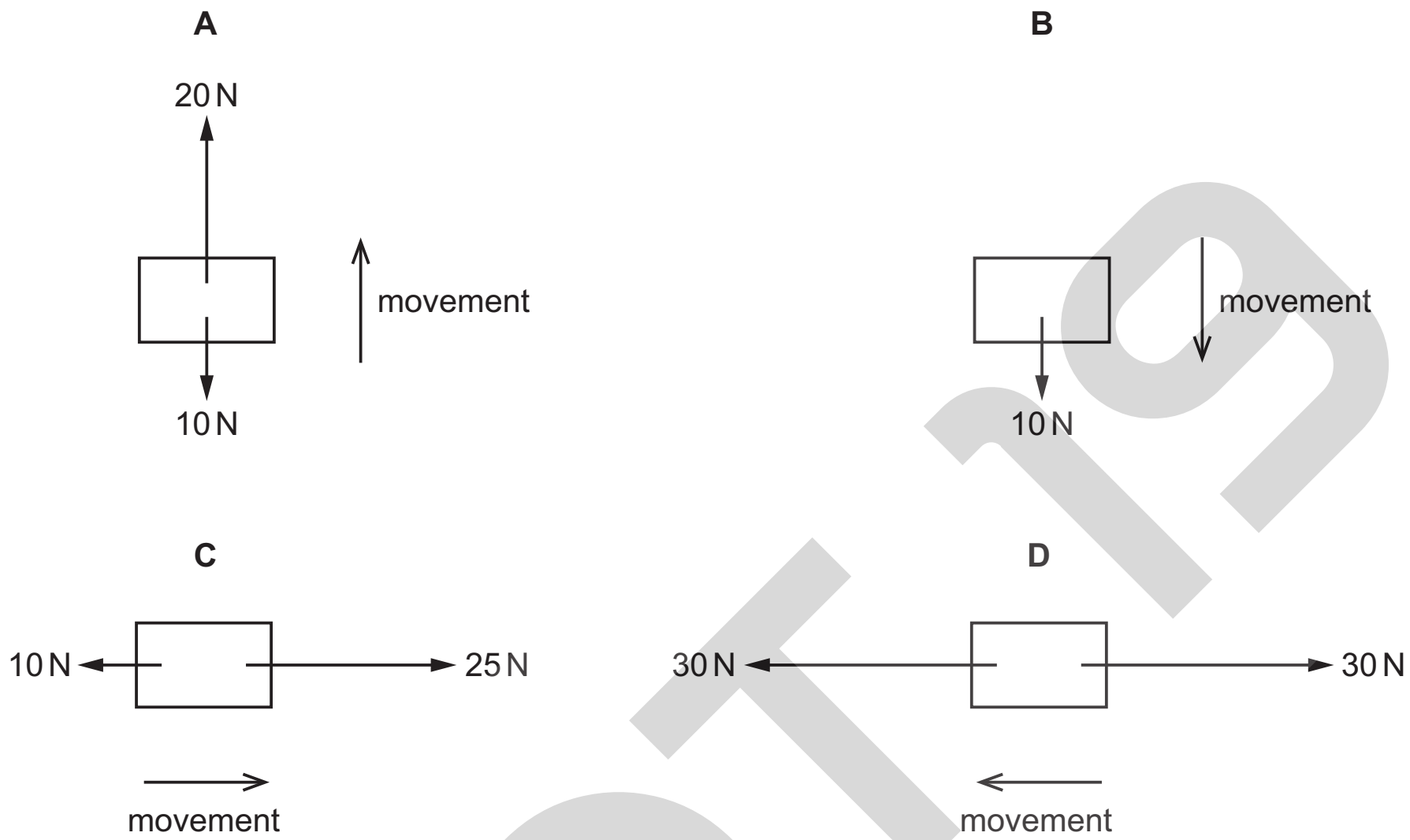

10 A steel ball is fired vertically upwards with a velocity *v*. The ball reaches a height *h*.

The same ball is now fired vertically upwards from the same position with a velocity 2*v*.

Air resistance can be ignored.

What is the new height reached by the ball?

A *h* **B** 2*h* **C** 4*h* **D** 8*h*

www.root19.com +91 - 9969 353 391

11 A solar panel is used to recharge a battery. The solar panel produces 0.80 W of electrical power. The panel is 20% efficient.

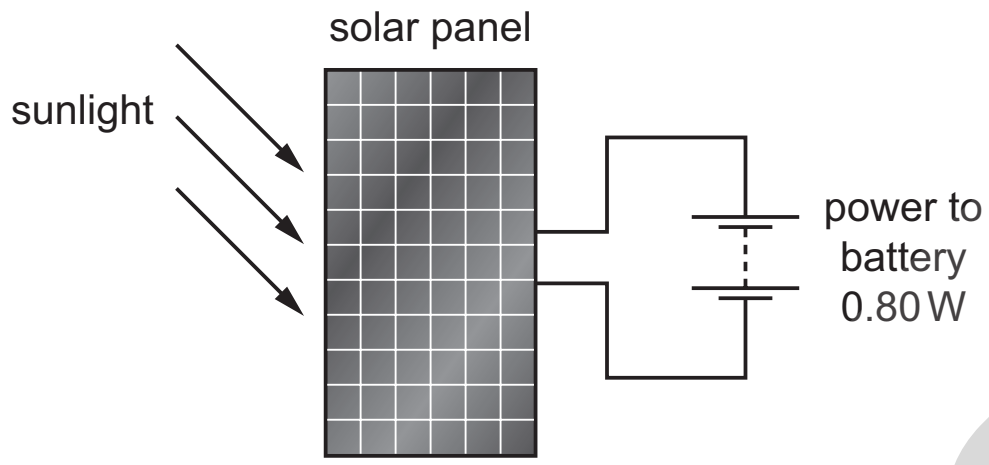

What is the power input of the sunlight onto the solar panel?

A 0.16 W **B** 4.0 W **C** 8.0 W **D** 16 W

12 The diagrams show four different athletes training by doing pull-ups.

Which athlete does the most work?

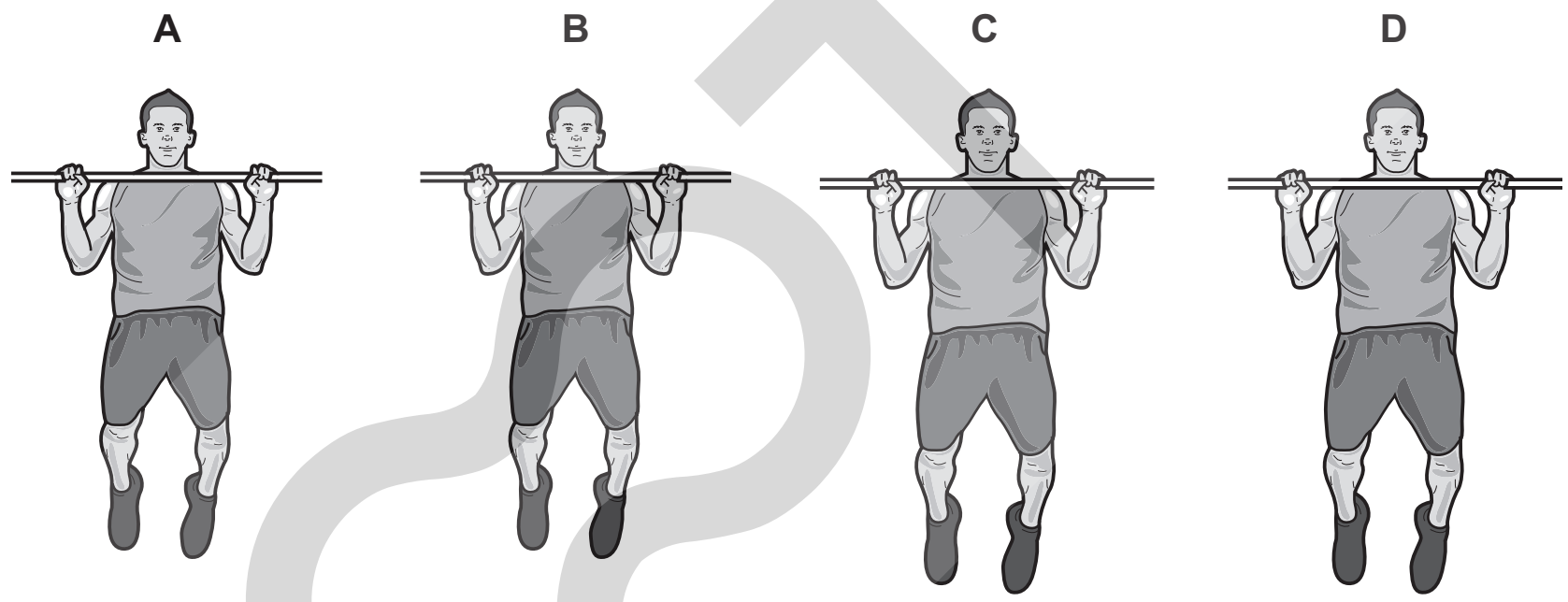

A	B	C	D
weight of athlete = 700 N	weight of athlete = 700 N	weight of athlete = 800 N	weight of athlete = 800 N
distance lifted = 0.50 m	distance lifted = 0.55 m	distance lifted = 0.50 m	distance lifted = 0.55 m

ROOT19

www.root19.com +91 - 9969 353 391

13 Four different liquids are poured into four containers.

The diagrams show the depth and the density of liquid in each container.

In which container is the pressure on its base the greatest?

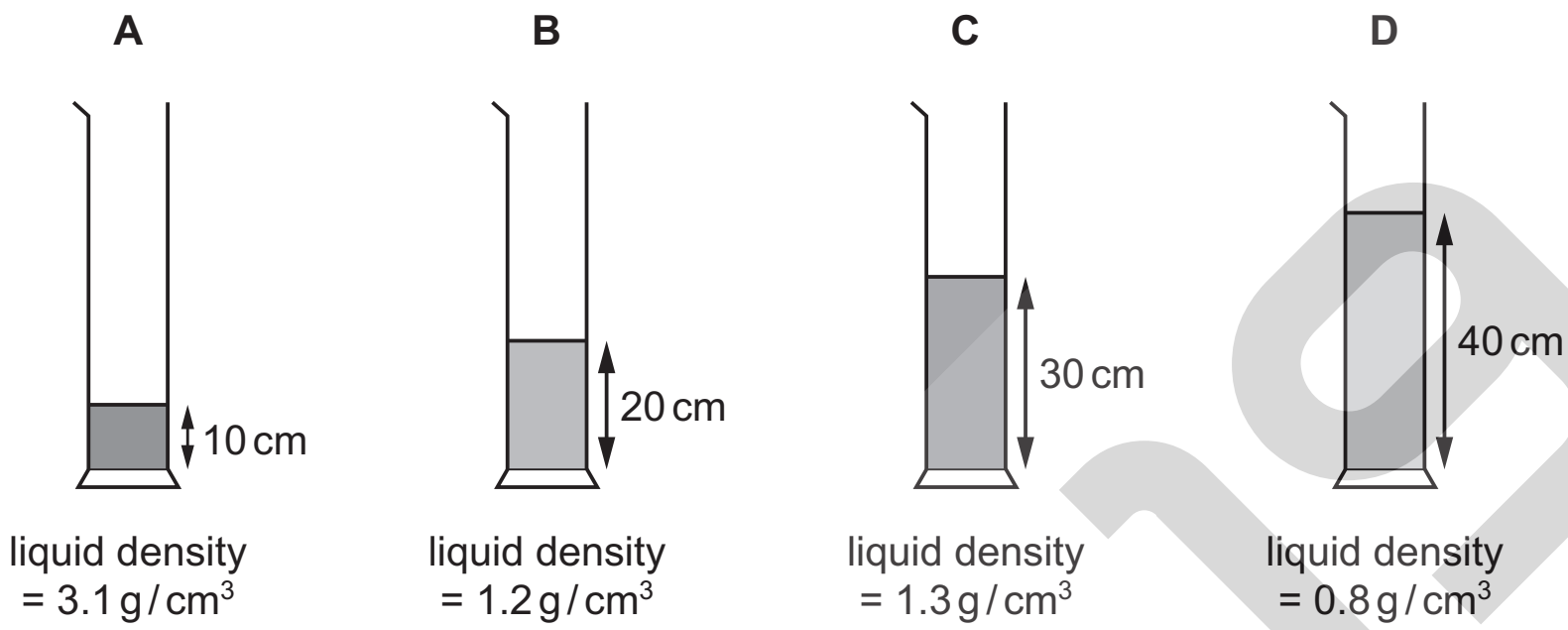

14 Brownian motion is observed when using a microscope to look at smoke particles in air.

What causes the smoke particles to move at random?

A Smoke particles are hit by air molecules.

B Smoke particles are moved by convection currents in the air.

C Smoke particles have different weights and fall at different speeds.

D Smoke particles hit the walls of the container.

15 The diagrams show four open dishes. Each dish contains water at the same temperature.

The dishes are different shapes and a draught blows over two of them.

From which container does the water evaporate at the greatest rate?

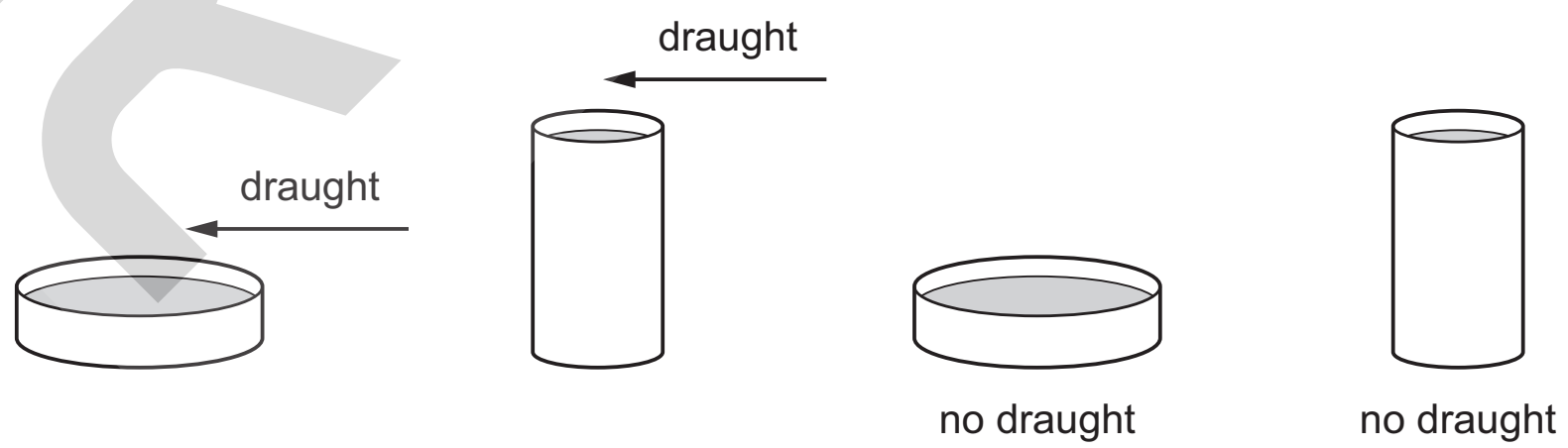

www.root19.com +91 - 9969 353 391

16 Equal masses of two different liquids are put into identical beakers.

Liquid 1 is heated for 100 s and liquid 2 is heated for 200 s by heaters of the **same power**.

Each liquid has the same rise in temperature.

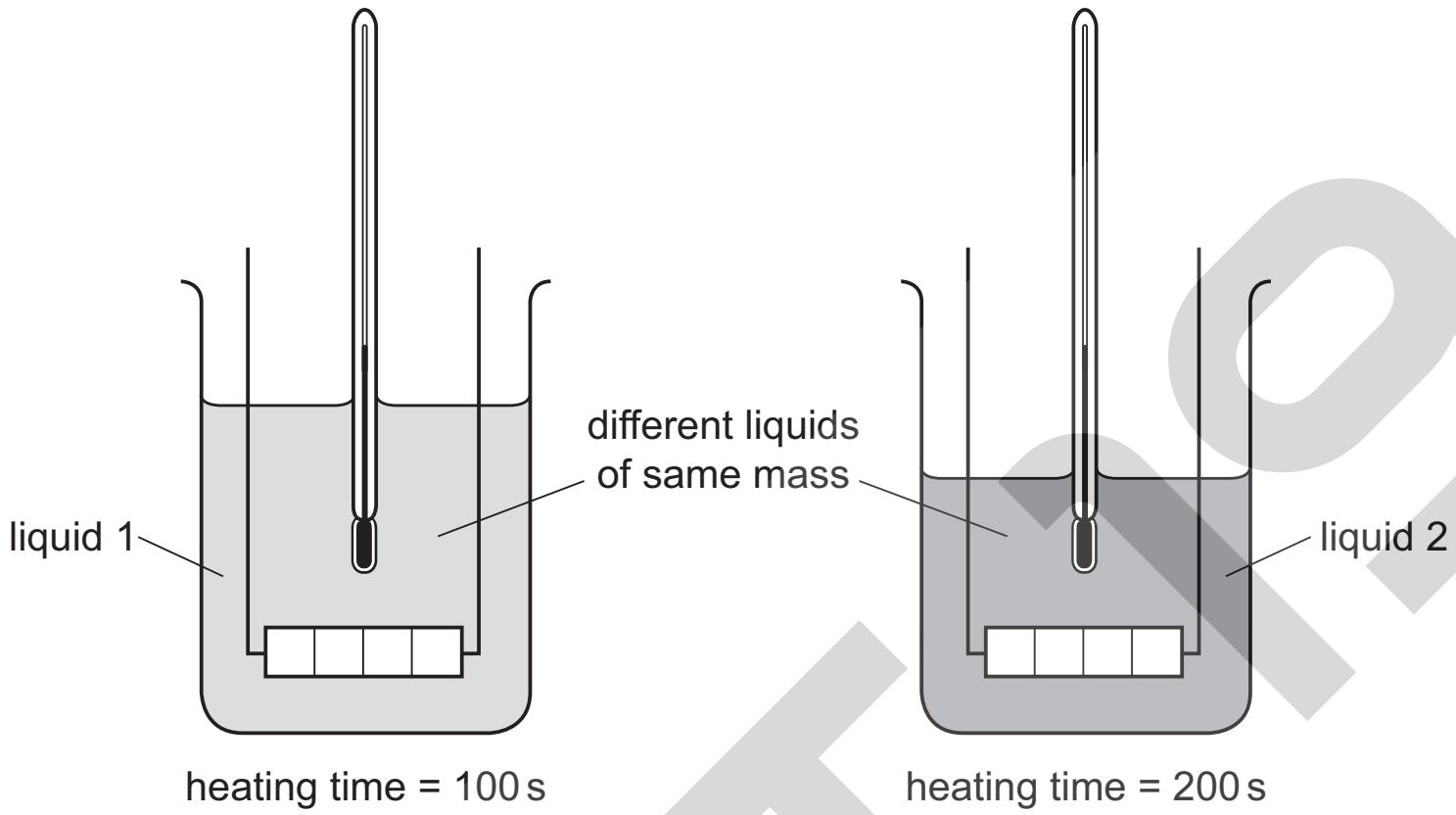

Which statement is correct?

A Each beaker of liquid has the same thermal capacity.

B Each beaker of liquid receives the same energy.

C Liquid 1 receives more energy than liquid 2.

D The thermal capacity of liquid 1 is less than the thermal capacity of liquid 2.

ROOT19

www.root19.com +91 - 9969 353 391

17 A block of ice at –20 °C is heated until it turns to steam. The graph of temperature against thermal energy absorbed is shown.

The latent heat of fusion of ice is 340 kJ / kg.

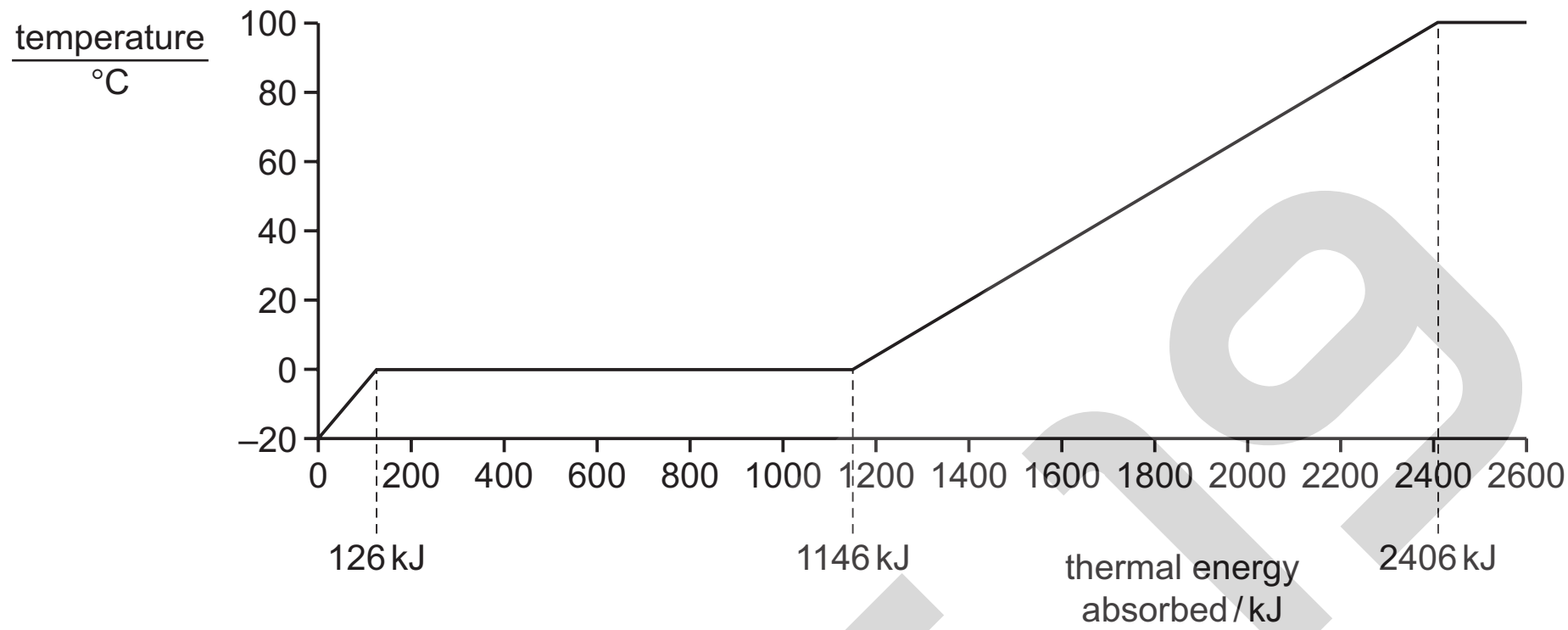

What is the mass of the ice?

A 1.0 kg **B** 2.0 kg **C** 3.0 kg **D** 4.0 kg

18 A copper bar and a wooden bar are joined. A piece of paper is wrapped tightly around the join.

The bar is heated strongly at the centre for a short time, and the paper goes brown on one side only.

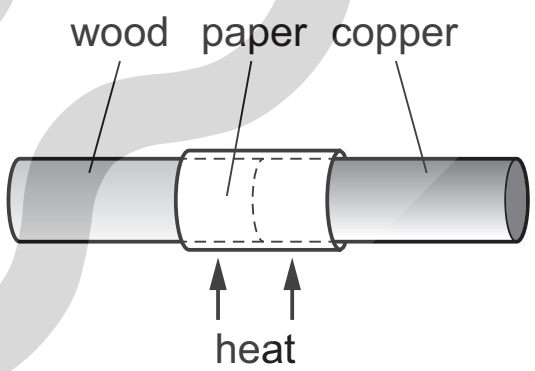

Which side goes brown, and what does this show about wood and copper?

	brown side	wood	copper
A	copper	conductor	insulator
B	copper	insulator	conductor
C	wood	conductor	insulator
D	wood	insulator	conductor

www.root19.com +91 - 9969 353 391

19 Different waves hit barriers with different sized gaps.

The waves will diffract.

In which diagram does the greatest spreading occur?

A

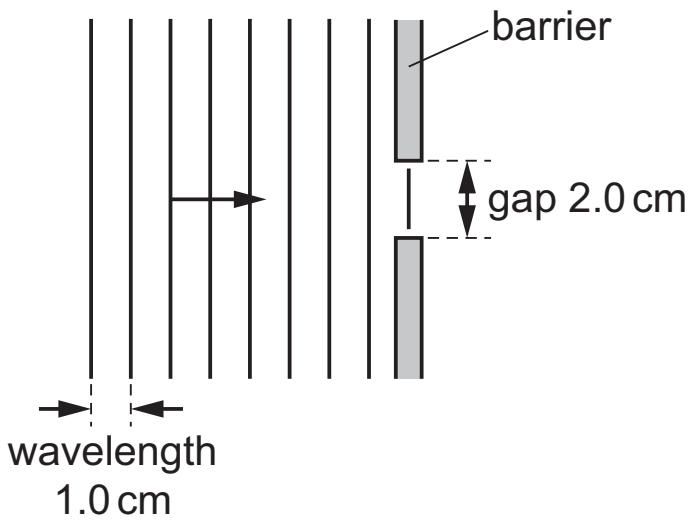

B

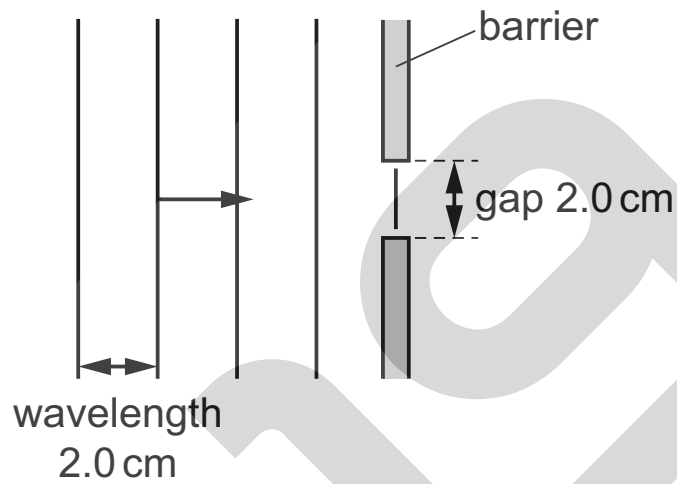

C

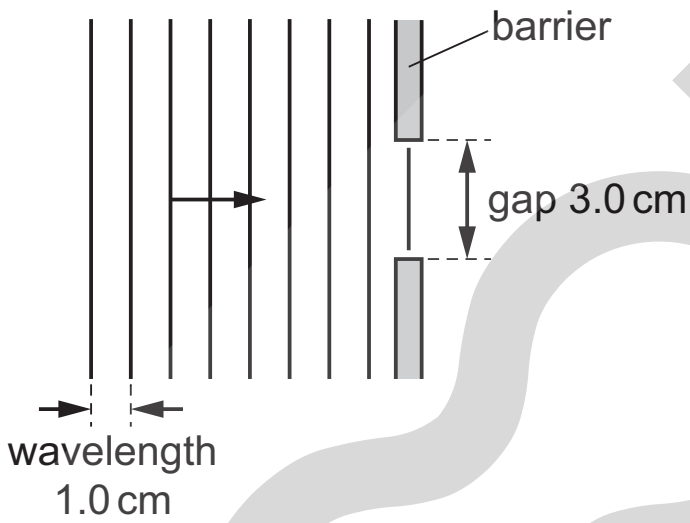

D

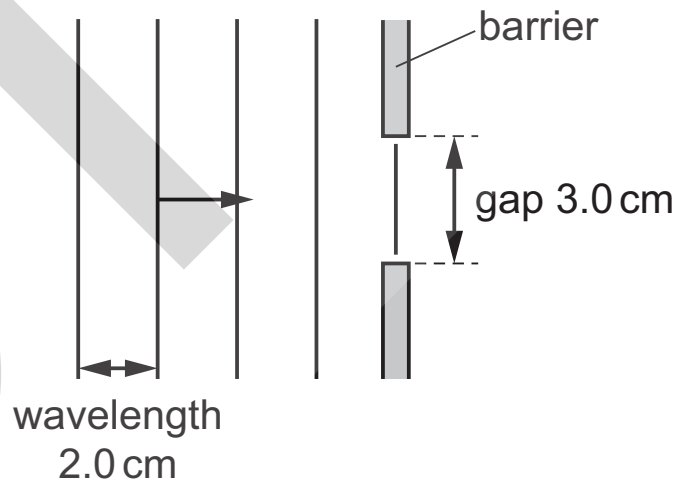

www.root19.com +91 - 9969 353 391

20 A converging lens is used to make an image on a screen.

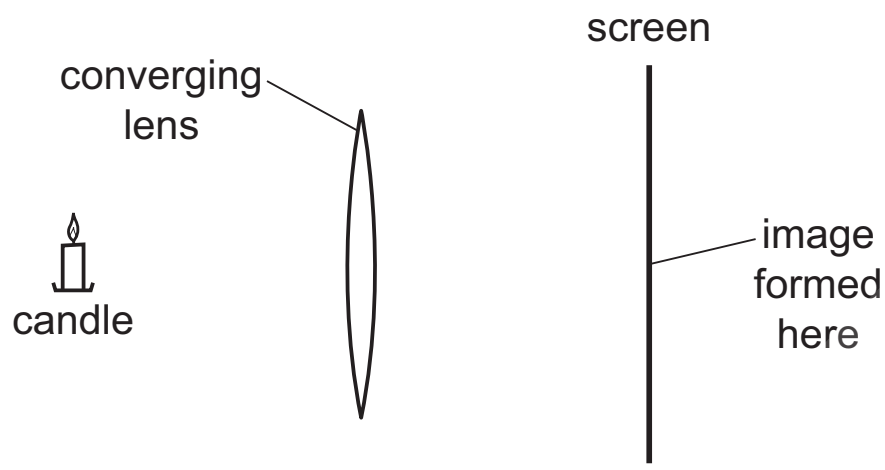

What type of image is formed on the screen?

A real and inverted

B real and upright

C virtual and inverted

D virtual and upright

21 Which diagram shows what happens when a ray of white light passes through a prism?

A

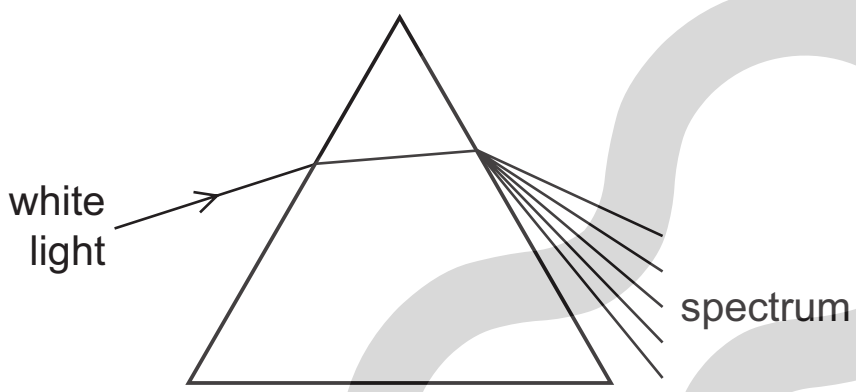

B

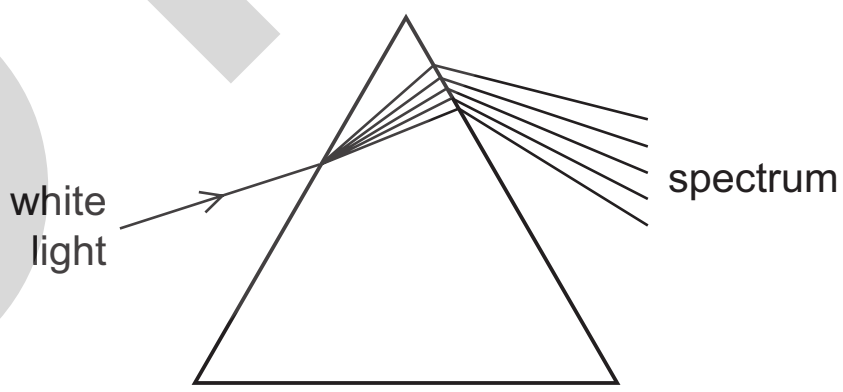

C

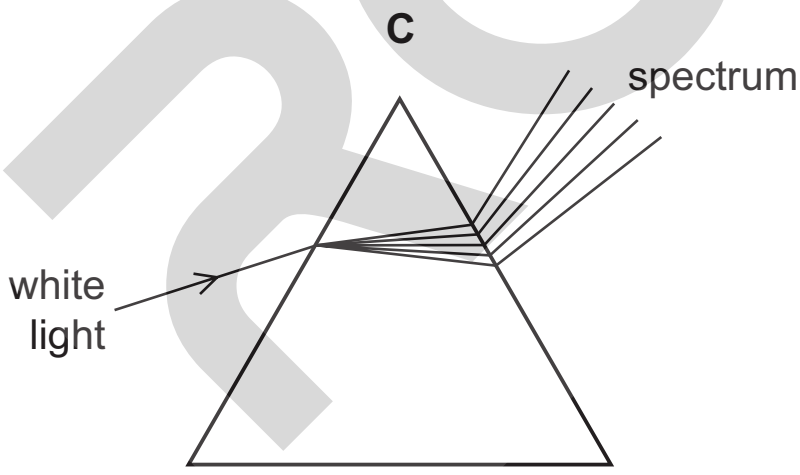

D

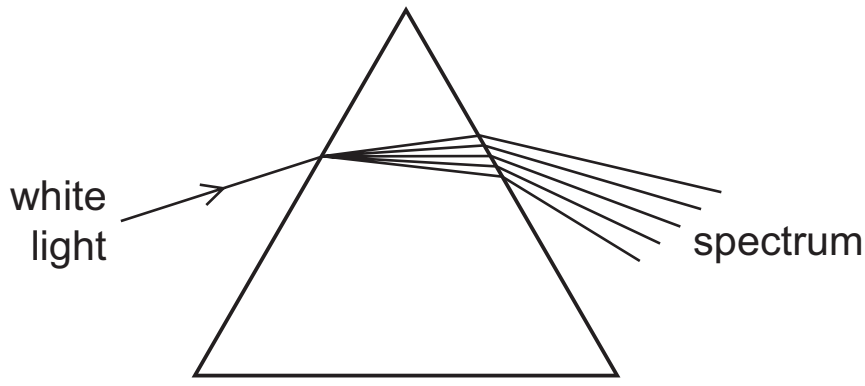

© UCLES 2017

www.root19.com
+91 - 9969 353 391

22 Light travels in a vacuum and then enters a glass block. The speed of the light in the glass block is 2.0×10^8 m/s.

Which statement about the speed of light is correct?

A The speed in a vacuum is 1.5 times the speed in the glass.

B The speed in the glass is the same as the speed in a vacuum.

C The speed in the glass is 1.5 times the speed in a vacuum.

D The speed in the glass is 1.0×10^8 times the speed in a vacuum.

23 A fire alarm is not loud enough and the pitch is too low. An engineer adjusts the alarm so that it produces a louder note of a higher pitch.

What effect does this have on the amplitude and on the frequency of the sound?

	amplitude	frequency
A	larger	greater
B	larger	smaller
C	smaller	greater
D	smaller	smaller

24 In which way are a bar magnet and an electromagnet similar?

A A bar magnet and an electromagnet are always magnetised when stored.

B A bar magnet and an electromagnet can both be used to separate magnetic and non-magnetic materials.

C A bar magnet can be made of steel and an electromagnet uses a steel core.

D The magnetic field strength of a bar magnet and of an electromagnet can both be varied.

25 A magnet near a coil of wire is attracted to the coil only when there is a current in the coil.

Which statement explains this force of attraction?

A The coil of wire has its own gravitational field.

B The coil of wire is made from soft iron.

C The current in the coil of wire creates a magnetic field.

D The current in the coil of wire induces a charge on the magnet.

ROOT 19

www.root19.com +91 - 9969 353 391

26 A steel magnet is placed in a coil and demagnetised.

Which type of current is established in the coil, and how is the current changed?

A a direct current in the coil, then reduce the current quickly to zero

B a direct current in the coil, then reduce the current slowly to zero

C an alternating current in the coil, then reduce the current quickly to zero

D an alternating current in the coil, then reduce the current slowly to zero

27 Which material is a conductor of electricity?

A brass

B glass

C plastic

D wood

28 The diagrams each show a positive point charge.

Which diagram represents the pattern and the direction of the electric field due to the charge?

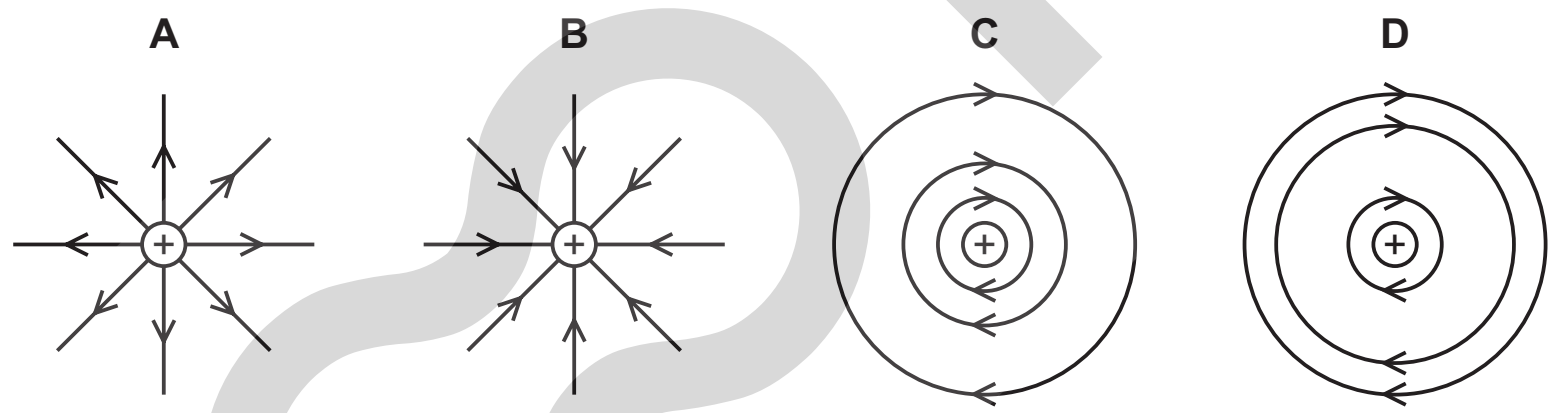

29 Which quantity is equivalent to 1.0 V?

A 1.0 J/C **B** 1.0 kJ/C **C** 1.0 J/s **D** 1.0 kJ/s

30 A circuit contains a fixed resistor. The potential difference across the resistor is 24.0 V and the current in the resistor is 2.30 A.

How much energy is transferred in the resistor in a time of 17.0 minutes?

A 938 J **B** 5630 J **C** 56.3 kJ **D** 9.38 kJ

www.root19.com +91 - 9969 353 391

31 A battery, an ammeter, a switch, a lamp and a resistor are connected together in a circuit.

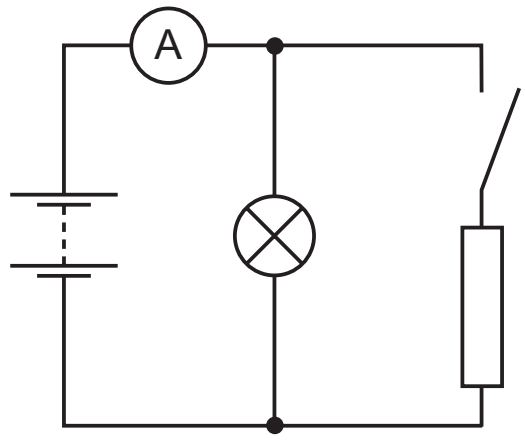

With the switch open, the ammeter reads 2.4 A. When the switch is closed, this reading increases to 4.0 A.

What is the current through the resistor with the switch closed?

A 0 A **B** 1.6 A **C** 3.2 A **D** 6.4 A

32 A student connects a variable potential divider (potentiometer) circuit.

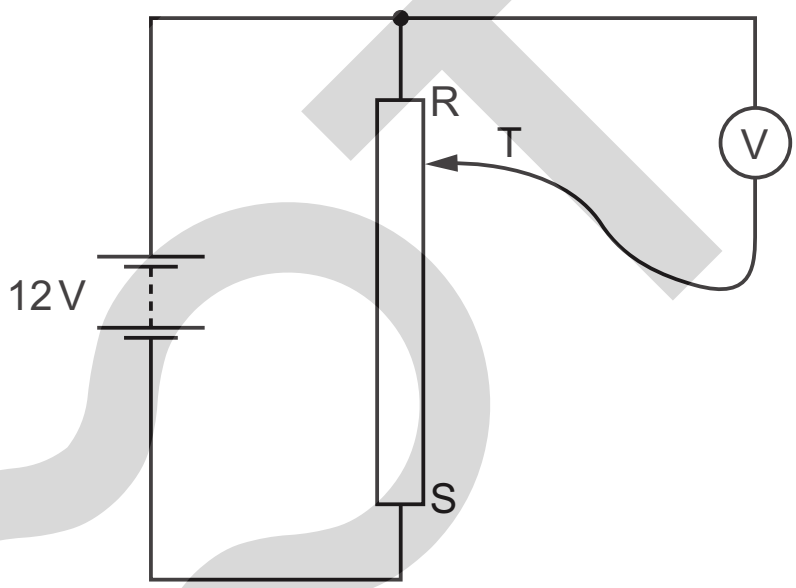

What happens to the reading on the voltmeter as the sliding terminal T is moved from R to S?

A It decreases from 12 V to 0 V.

B It increases from 0 V to 12 V.

C It remains at 0 V.

D It remains at 12 V.

www.root19.com +91 - 9969 353 391

33 The diagram shows a circuit used to make a light detector.

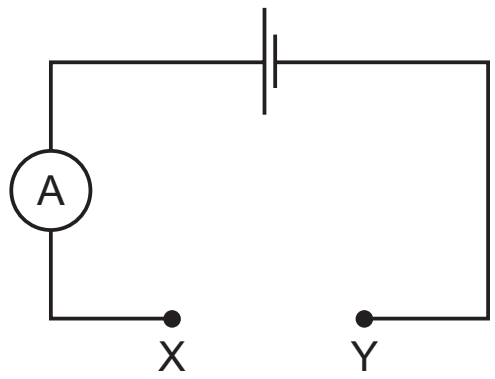

One component is connected between X and Y.

Which component causes the ammeter reading to increase when the light gets brighter?

A

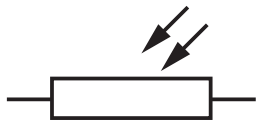

B

C

D

34 A truth table for a type of logic gate is shown.

input 1	input 2	output
0	0	0
0	1	1
1	0	1
1	1	1

Which type of logic gate is it?

A AND **B** NOR **C** NOT **D** OR

35 In which device is a split-ring commutator used, and what is its purpose?

	device	purpose
A	a.c. generator	to change the direction of the current in the coil as it turns
B	a.c. generator	to change the output current from d.c. into a.c.
C	d.c. motor	to change the direction of the current in the coil as it turns
D	d.c. motor	to change the input current from a.c. into d.c.

© UCLES 2017

www.root19.com
+91 - 9969 353 391

36 What is the purpose of a relay?

A to change a large voltage into a small voltage

B to change a small voltage into a large voltage

C to use a large current to switch on a small current

D to use a small current to switch on a large current

37 When a source of α-particles is directed towards a thin metal foil they become scattered.

Which observation of this experiment provides evidence for a small charged nucleus?

A A small proportion of the α-particles come straight back from the foil towards the source.

B A small proportion of the α-particles pass straight through the foil.

C Some of the α-particles are deflected by an angle of less than 90°.

D Some of the α-particles follow a curved path after leaving the foil.

38 Which description of a neutral atom of copper is correct?

A a nucleus surrounded by electrons

B a nucleus surrounded by molecules

C electrons surrounded by a nucleus

D electrons surrounded by molecules

39 A sample of radioactive isotope is decaying.

The nuclei of which atoms will decay first?

A It is impossible to know because radioactive decay is random.

B It is impossible to know unless the age of the material is known.

C The atoms near the centre will decay first because they are surrounded by more atoms.

D The atoms near the surface will decay first because the radiation can escape more easily.

© UCLES 2017

www.root19.com

+91 - 9969 353 391

40 A student determines the half-life of a radioactive isotope.

The student uses a detector over five minutes and plots a graph showing how the count rate shown on the detector varies with time.

The count rate due to background radiation is 30 counts per minute.

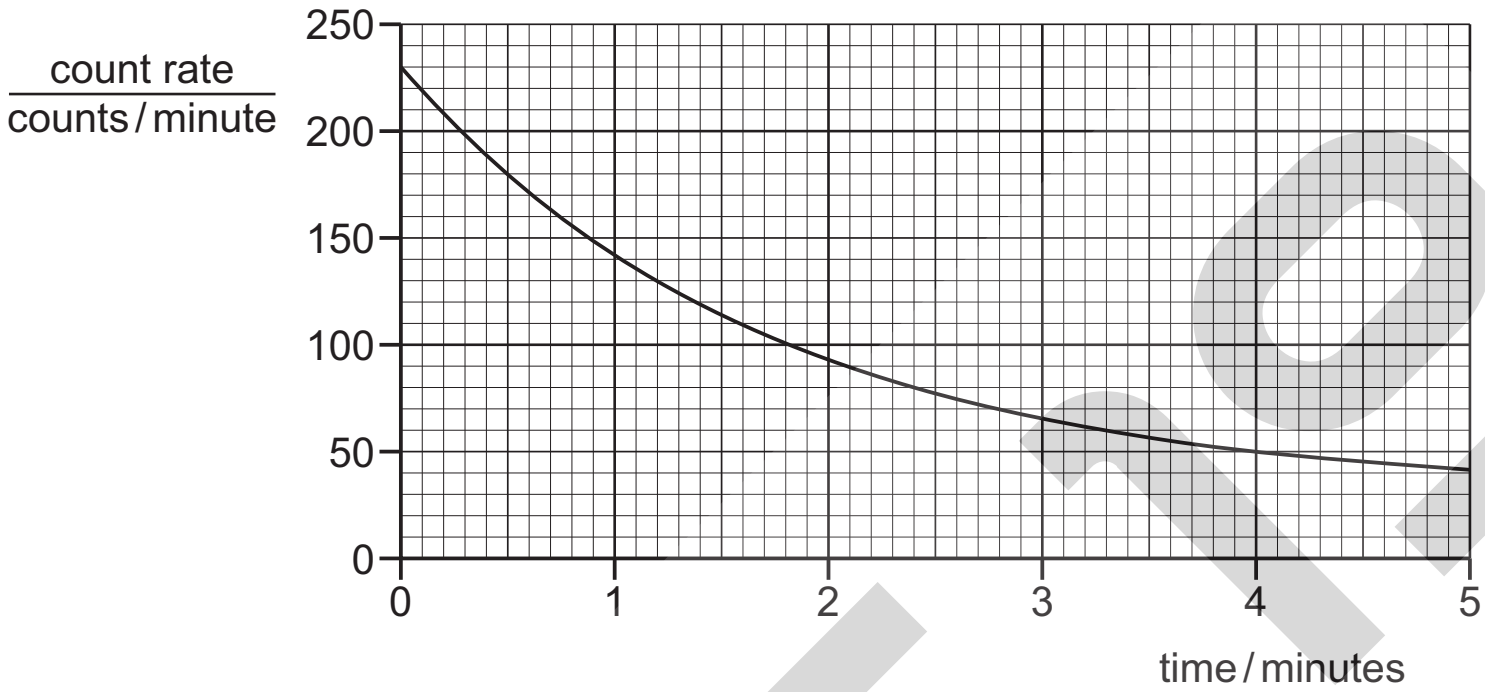

What is the half-life of this isotope?

A 0.30 minutes

B 1.2 minutes

C 1.5 minutes

D 5.0 minutes

© UCLES 2017

www.root19.com
+91 - 9969 353 391

BLANK PAGE

© UCLES 2017

www.root19.com
+91 - 9969 353 391

BLANK PAGE

Permission to reproduce items where third-party owned material protected by copyright is included has been sought and cleared where possible. Every reasonable effort has been made by the publisher (UCLES) to trace copyright holders, but if any items requiring clearance have unwittingly been included, the publisher will be pleased to make amends at the earliest possible opportunity.

To avoid the issue of disclosure of answer-related information to candidates, all copyright acknowledgements are reproduced online in the Cambridge International Examinations Copyright Acknowledgements Booklet. This is produced for each series of examinations and is freely available to download at www.cie.org.uk after the live examination series.

Cambridge International Examinations is part of the Cambridge Assessment Group. Cambridge Assessment is the brand name of University of Cambridge Local Examinations Syndicate (UCLES), which is itself a department of the University of Cambridge.

© UCLES 2017

www.root19.com

+91 - 9969 353 391